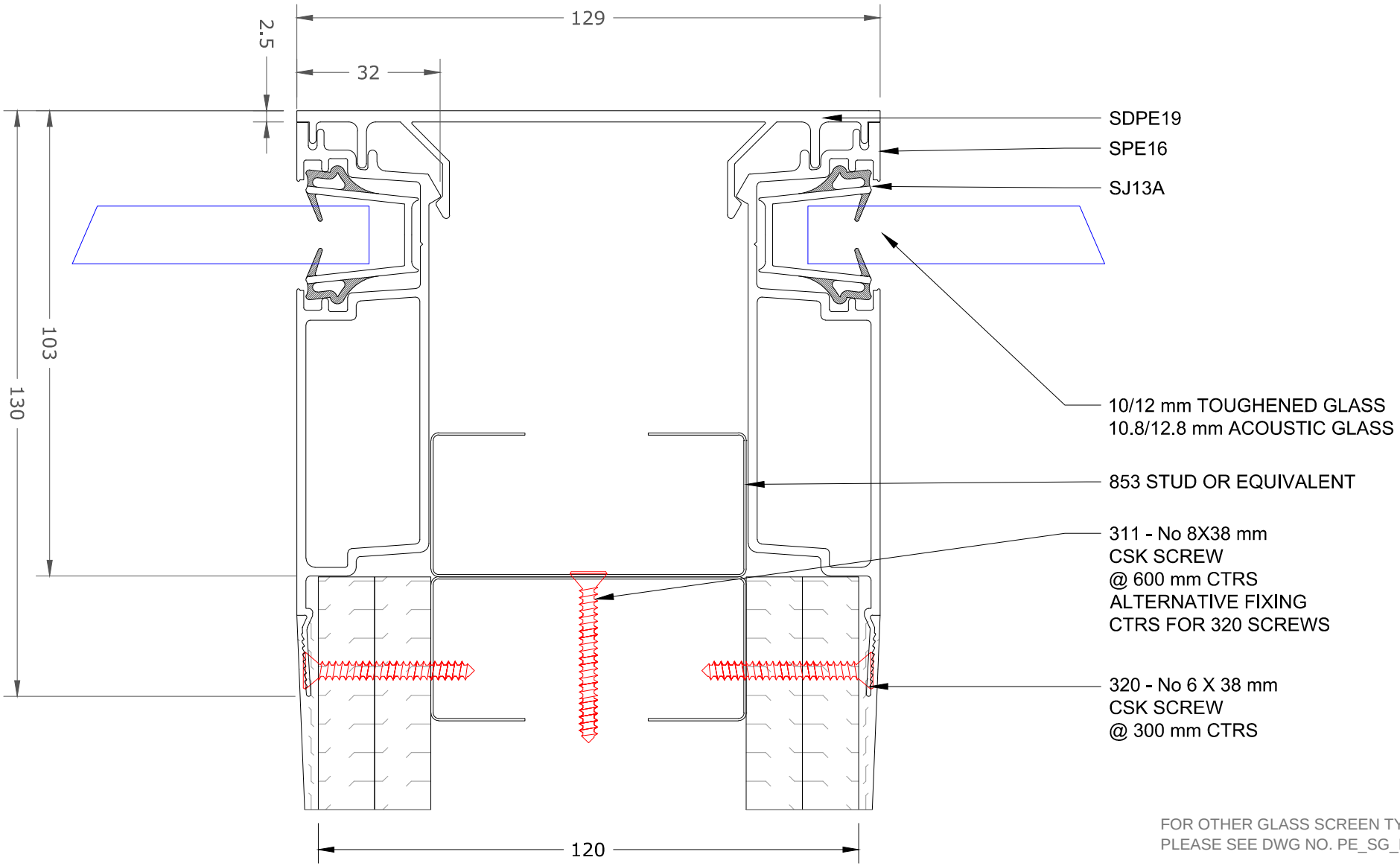

FOR OTHER GLASS SCREEN TYPES
PLEASE SEE DWG NO. PE_SG_LJ_01.

ALL DIMENSIONS ARE NOMINAL & IN mm

komfort
intelligent space

ASHURST,BROADLANDS BUSINESS CAMPUS,
LANGHURST WOOD ROAD, HORSHAM,
WEST SUSSEX, RH12-4QP
www.komfort.com

SYSTEM:	JUNCTION CATEGORY:	DRAWING NO:	SCALE:	ISSUE NO:
POLAR EVOLVE	3-WAY DETAIL	PE_SG_WA_10	NTS	1
	JUNCTION DESCRIPTION:	KEY COMPONENTS:	DATE:	
	3-WAY WALL ABUTMENT FOR SINGLE GLAZED. USING 10-12.8 mm GLASS	SPE16/SDPE19	5/5/16	