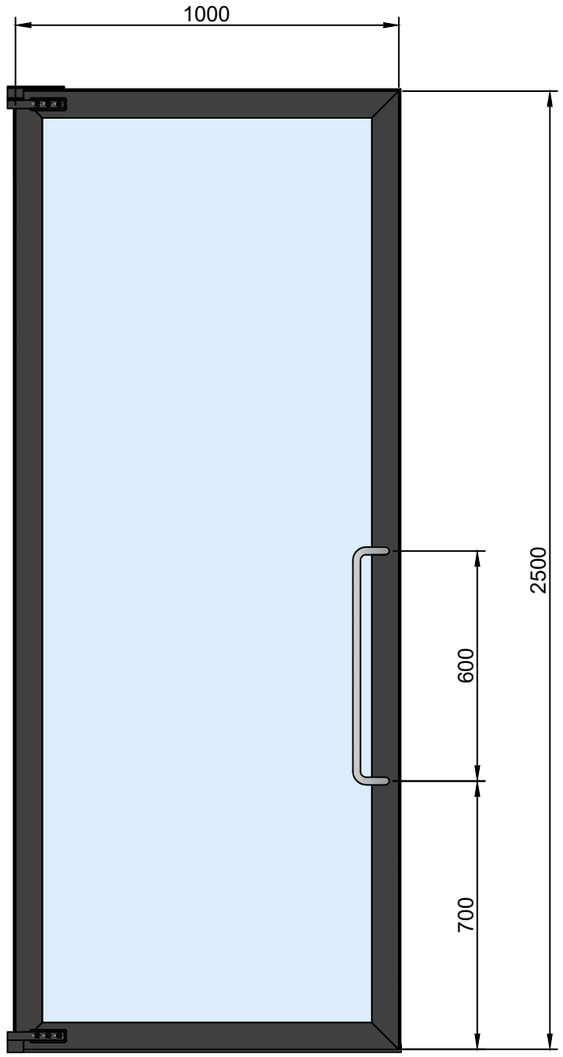

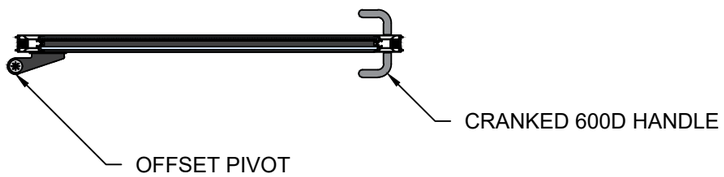

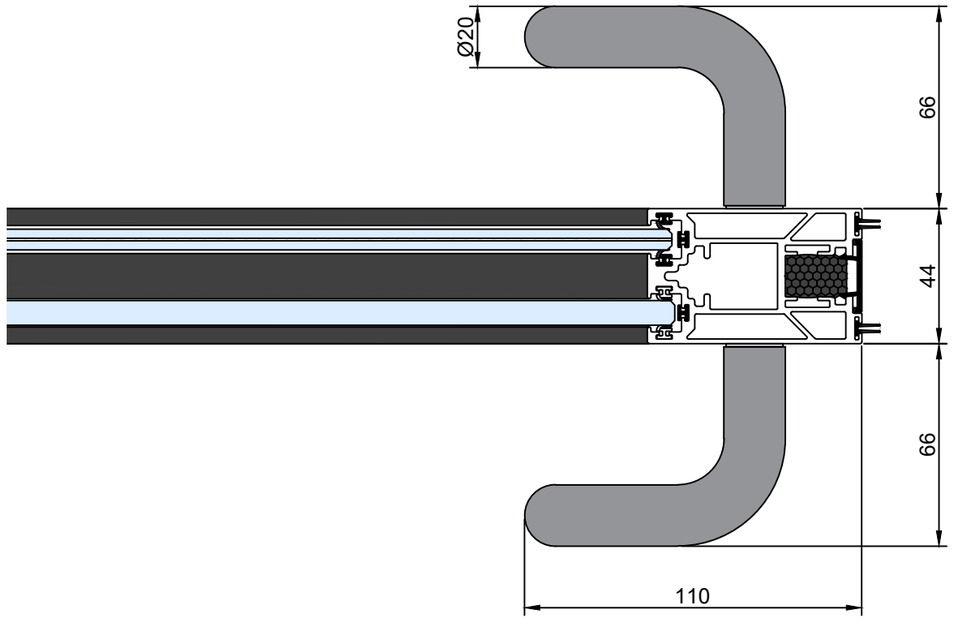

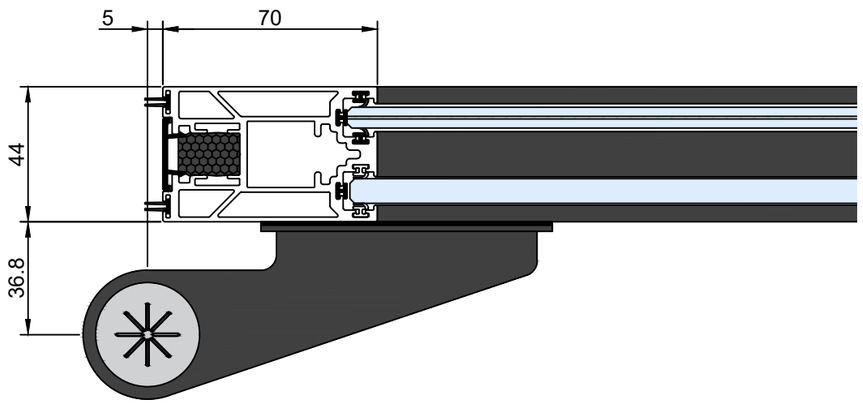

komfort partitioning solutions

UNIT 501 AXCESS 10
BENTLEY ROAD SOUTH
WEDNESBURY WS10 8LQ

GENERAL NOTES:

DO NOT SCALE THIS DRAWING
UNLESS OTHERWISE STATED ALL DIMENSIONS ARE IN MILLIMETRES
REMOVE ALL BURRS AND SHARP EDGES

IF IN DOUBT - ASK!

GENERAL TOLERANCES:

UNLESS OTHERWISE STATED

0 DECIMAL PLACES +/-0.25MM
1 DECIMAL PLACE +/-0.1MM
2 DECIMAL PLACES +/-0.05MM
ANGULAR DIMENSIONS +/-0.25°

PROJECTION:

1ST ANGLE

www.komfort.com

ADDITIONAL NOTES:

THIS DRAWING IS THE PROPERTY OF KOMFORT PARTITIONING LTD
IT IS COPYRIGHT PROTECTED AND CONFIDENTIAL
IT MUST NOT BE USED IN ANY WAY DETRIMENTAL TO THEIR INTERESTS
© COPYRIGHT AND DESIGN 2017

SYSTEM / PRODUCT: SONIK

MATERIAL: VARIES

DRAWING NO: SP-1920

ISSUE NO: 1

DESCRIPTION: 70MM DG SONIK DOOR WITH OFFSET PIVOTS + 600D CRANKED

DRAWN: SC

DATE: 02/09/20

SCALE: NTS